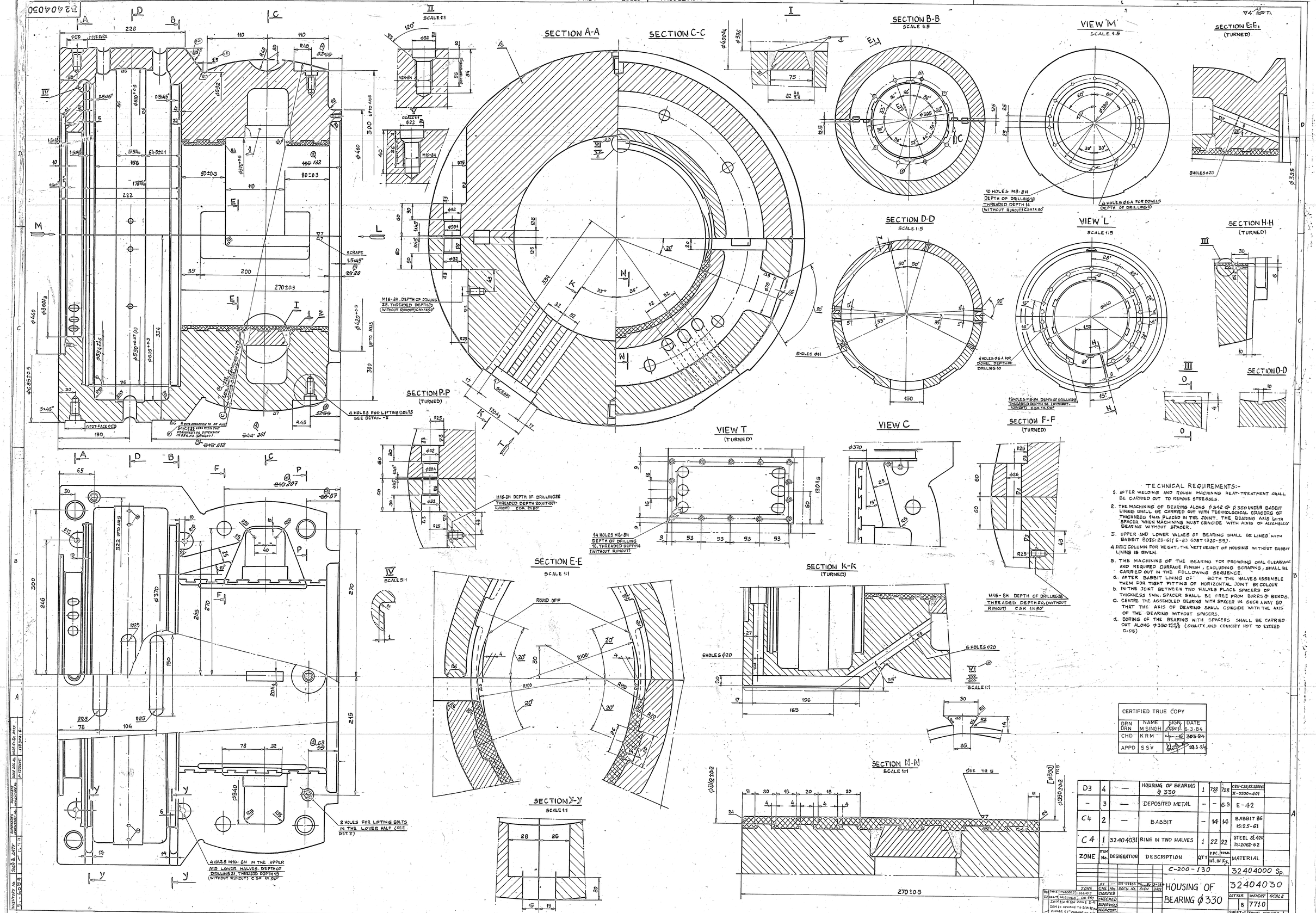

TECHNICAL REQUIREMENTS:-

1. AFTER WELDING AND ROUGH MACHINING HEAT-TREATMENT SHALL BE CARRIED OUT TO REMOVE STRESSES.
2. THE MACHINING OF BEARING ALONG ϕ342 & ϕ350 UNDER BABBIT LINING SHALL BE CARRIED OUT WITH TECHNOLOGICAL SPACERS OF THICKNESS 1MM PLACED IN THE JOINT. THE BEARING AXIS WITH SPACER WHEN MACHINING MUST COINCIDE WITH AXIS OF ASSEMBLED BEARING WITHOUT SPACER.
3. UPPER AND LOWER VALVES OF BEARING SHALL BE LINED WITH BABBIT Б83Б: 23-61 (Б-83 GOST 1320-55).
4. IN THE COLUMN FOR WEIGHT, THE NETT WEIGHT OF HOUSING WITHOUT BABBIT LINING IS GIVEN.
5. THE MACHINING OF THE BEARING FOR PROVIDING OVAL CLEARANCE AND REQUIRED SURFACE FINISH, EXCLUDING SCRAPING, SHALL BE CARRIED OUT IN THE FOLLOWING SEQUENCE.
   a. AFTER BABBIT LINING OF BOTH THE HALVES ASSEMBLE THEM FOR TIGHT FITTING OF HORIZONTAL JOINT BY COLOUR
   b. IN THE JOINT BETWEEN TWO HALVES PLACE SPACERS OF THICKNESS 1MM. SPACER SHALL BE FREE FROM BURRS & BENDS.
   c. CENTRE THE ASSEMBLED BEARING WITH SPACER IN SUCH A WAY SO THAT THE AXIS OF BEARING SHALL COINCIDE WITH THE AXIS OF THE BEARING WITHOUT SPACERS.
   d. BORING OF THE BEARING WITH SPACERS SHALL BE CARRIED OUT ALONG ϕ350 +0.05 −0.03 (OVALITY AND CONICITY NOT TO EXCEED 0.05)

CERTIFIED TRUE COPY

DRN	NAME	SIGN	DATE
DRN	M SINGH		6.3.84
CHD	K R M		30.3.84
APPD	S S V		30.3.84

ZONE	ITEM No.	DESIGNATION	DESCRIPTION	QTY	P.P.C. WT. IN Kg.	TOTAL	MATERIAL
D3	4	—	HOUSING OF BEARING ϕ 330	1	728	728	CS11-C25;15:28568; II-0500-401
—	3	—	DEPOSITED METAL	—	—	6.9	E-42
C4	2	—	BABBIT	—	14	14	BABBIT Б6 15:25-61
C4	1	32404031	RING IN TWO HALVES	1	22	22	STEEL St 45 15:2062-62

C-200-130

32404000 Sp.

HOUSING OF BEARING ϕ 330

32404030

LETTER	WEIGHT	SCALE
B	771.0	

SHEET-1 TOTAL SHEETS-1

HEEP STD.

ZONE	CHG. No.	DOCU. No.	SIGN	DATE
D1	—	DIE-97438		31-3-84

DRAWN: DRAWN 2 CHECKED: DR ERY
DIMENSION WITHOUT TOLERANCE DATA
DIMS TO CONFORM TO DIN 80 PARTS 5 & 7 CONFORM TO DIN 7168 PART 1 - 03-F0035.

DRAWN HARDED SUPERVISED TECH CONTL STD. CONT. APPROVED

INVENTORY No. 3-6583 | SIGN & DATE | SUPERSEDES INVENTORY No. | SUPERSEDED BY INVENTORY No. | USED ON No. | NOT ON Sp. REQT. | 1183921-8

32404030